BOSSARD

DIN 1587

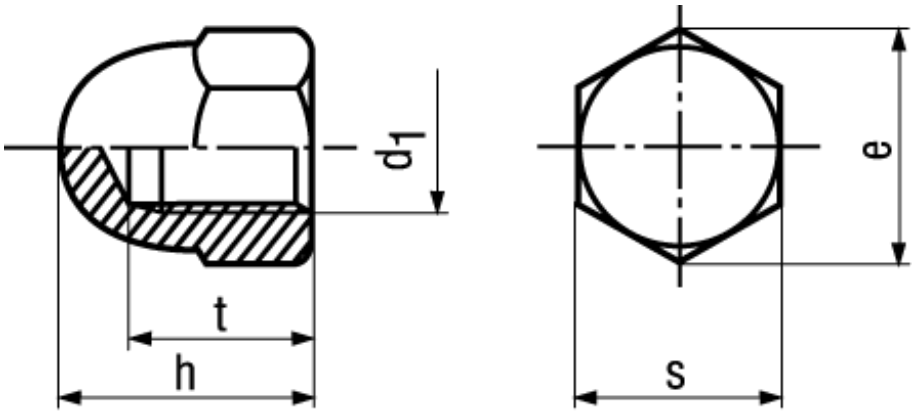

BN 513

Hex domed cap nuts

(Acorn nuts)

Brass

plain

- ~UNI 5721

M3: not included in DIN 1587, M10; M12: wrench size according to ISO on request

Article#	d_1	e min.	h	s	t min.	t max.
1159623	M3	6,08	6	5,5	3,6	4
1196367	M4	7,66	8	7	5,26	5,74
1196375	M5	8,79	10	8	7,21	7,79
1196383	M6	11,05	12	10	7,71	8,29
1196391	M8	14,38	15	13	10,65	11,35
1196405	M10	18,9	18	17	12,65	13,35
1196413	M12	21,1	22	19	15,65	16,35
1159631	M16	26,75	28	24	20,58	21,42